Product Technical Information
DS_TTH-21E_2109_EN

Series EXtemp, Model TTH 21E

Thermocouple Assembly for High Temperature Measurement
Simplex or duplex configurations. Customized versions up to 1600ºC

Application

The EXtemp model TTH 21E is suitable for high temperature measurements in industrial furnaces up to 1600ºC.

The model TTH 21E is manufactured with simplex or duplex thermocouple types J, K, N, S, R and B installed in protective ceramic tube and isolators. Optionally can be supplied with a metallic sleeve, useful to use in conjunction with an adjustable flange connection.

Are available a wide range of configurations of single and double customized protective sheaths, allowing the thermocouples EXtemp TTH 21E to be used in many high temperature demanding applications.

If requested, can be supplied with temperature transmitter, PC or HART programmable 4...20mA 2 wires technology, according to customer requested range.

Your Advantages

- High immunity to thermal shocks
- With replaceable measuring insert
- All high temperature thermocouples
- Standard simplex and duplex
- OEM customization

Overview

Informative Signs

	Information	This symbol contains device-oriented information which does not result in personal injury.
	Checking	This symbol contains procedures and other facts to get the most of the device and which do not result in personal injury.
	Caution	This symbol alerts you to a dangerous situation. Failure to avoid this situation can result in damaged device and which do not result in personal injury.
	Warning	This symbol alerts you to a dangerous situation. Failure to avoid this situation can result in minor or medium injury.
	Danger	This symbol alerts you to a dangerous situation. Failure to avoid this situation will result in serious or fatal injury.

Product Overview

A thermocouple consists of the junction of two different metals at one end called the hot junction, producing an electromotive force when the hot junction and the cold junction at the other end are placed at different temperatures. The hot junction is the part of the thermocouple to be subjected to the process temperature. The cold or reference junction is usually at a lower (ambient) temperature and will compensate for the hot junction. The electromotive force generated by the thermocouple varies with the junction metals. The thermocouple element usually ends at a connection head. However, it can be transferred by compensation cable to other measuring and control instruments. Thermocouples are used for temperature measurement in the range of -270ºC to 2200ºC.
The mineral insulated thermocouple was initially developed for applications in the nuclear sector, and was later extended to other sectors of the production process. The main reasons that generated its development were the need for a thermocouple with a shorter response time than that obtained with the conventional thermocouple mounted with a protection tube and that the thermo-elements do not come into direct contact with the environment in which they would be inserted.

The manufacture of a thermocouple with mineral insulation cable starts from a conventional thermocouple assembled with a protection tube or sheath. In this process, the thermo-elements are isolated from each other by a compacted powder of magnesium oxide and protected by a metal sheath (originally the protection tube). Thus, despite the fact that a given thermocouple has a permissible range of use for a given process, it must be taken into account whether the material selected for the protective sheath is sufficiently resistant to the type of medium to be immersed. A correct selection of the material for this component, allows establishing a longer period of life for the thermocouple, with greater reliability and lower operating costs.
Mineral-insulated thermocouples can be assembled with the isolated, grounded or exposed measurement junction. If not specified, they will be manufactured with isolated junction

Consider a conventional thermocouple with a metal protection tube. Realizing that it is subjected to a temperature difference, as part of it is in contact with the process and the other end is in contact with the environment, each of them at its temperature. It is inevitable that through the sensor / protection tube assembly there is a heat flow from the highest temperature to the lowest temperature region. The balance occurs when the heat flow received by the sensor is equal to that lost by the sensor, and in this situation its temperature is not necessarily equal to the process temperature.

Since it is desired to measure the process temperature and the temperature value measured by the sensor is as close as possible to it, it is necessary that in the installation in the process some care is taken when choosing the sensor set and its accessories.

- ☑ The sensor / accessory set must have a mass that is as small as possible when compared to the process mass. There is a thermal resistance of the set that can cause a temperature difference between the sensor and the process and the greater the mass of this set, the greater the value of this resistance. Another undesirable phenomenon is when the process has fluctuations in the value of its temperature and by the inertia of the sensor, these fluctuations are attenuated or simply not detected, a fact directly related to the mass of the sensor.

- ☑ Another relevant factor is the depth of immersion of the sensor in the medium whose temperature is to be measured. The greater the immersion of the sensor, the lower the temperature gradient that, in the case of a thermocouple, the measurement junction will be subjected to. The consequence is that the temperature of the measuring junction approaches the temperature of the medium. A practical recommendation is that the immersion depth is at least 6 times the value of the external diameter of the set for measurement in liquids and 20 times for air, gases or steam.

- ☑ When the thermocouple / extension cable set is installed in the process close to electromagnetic fields, it is very likely that inductions will occur in the set, causing an erroneous reading of the measured temperature values. In this situation, insulated junction thermocouples must be used, with the sheath or protective tube to earth, as well as the extension / compensation cable, which must also be shielded and connected to earth.

- ☑ It should be considered that thermocouples in general deteriorate over time, occurring quite significantly when installed in processes at high temperature and in aggressive environments. Therefore, due to the peculiarities of each process, it is necessary to establish a useful life for the sensor and proceed to its preventive replacement or periodic calibration of the set.

The EXtemp TTH 21E is manufactured with ceramic protection tube, optional cooling neck and connection head. The measuring insert is available with inner ceramic tubes for noble metals types S, R or B or replaceable measuring insert in mineral insulated cable for thermocouples types J, K and N. A special version is available for type S with mineral insulated cable.

The process connection and neck are also customized. We provide different housings to properly allocate a suitable terminal block and/or a temperature transmitter.

	This product is not intended to be used in oxygen service under ATEX directive.
	This device is intended to measure high temperatures. Even with a long neck, high temperatures may reach instrument housing when in operation. Handle with care.
	Please note ambient temperature cannot be greater than measuring insert sealing.
	This instrument is manufactured with external and optionally with internal ceramics. Handle with care. Do not install with process running at high temperatures. Ceramics will break.

Types of Thermocouples

The most common thermocouples used in industrial applications are types, K, J, T, N, S and R. Below is shown the main features for those thermocouples.

Thermocouple Type K (NICKEL CHROMIUM - NICKEL)

Positive Element (KP)	Ni90%Cr10%	Measurement range	-270°C to 1200°C
Negative Element (KN)	Ni95%Mn2%Si1%A12%	Thermocouple emf	-6,458 mV to 48,838 mV

Can be used on oxidant and inertial atmospheres. Due to its oxidation resistance is used at high temperatures above 600ºC and low temperatures below 0ºC. Should not be used on reducer and sulphuric atmospheres. At high temperatures and with low oxygen content, chromium diffusion happens, leading to a thermocouple response curve gap.

Thermocouple Type J (IRON - CONSTANTAN)

Positive Element (JP)	Fe99,5%	Measurement range	-210°C to 760°C
Negative Element (JN)	Cu55%Ni45%	Thermocouple emf	-8,096 mV to 42,919 mV

Can be used in neutral, oxidant or reducer atmospheres. Is not recommendable to be used at relative humidity (RH) atmospheres and at low temperatures (the thermo element JP becomes fragile). Above 540°C, iron suffers oxidation very quickly. Also, not recommendable to be used on sulphur atmospheres above 500°C.

Thermocouple Type T (COPPER - CONSTANTAN)

Positive Element (TP)	Cu100%	Measurement range	-270°C to 400°C
Negative Element (TN)	Cu55%Ni45%	Thermocouple emf	-6,258 mV to 20,872 mV

Can be used in neutral, oxidant or reducer atmospheres. It shows very good accuracy, due to copper properties. Above 300°C, the copper oxidation becomes very intense, reducing the thermocouple lifetime and causing deviation on the thermocouple original response curve.

Thermocouple Type N (NICROSIL - NISIL)

Positive Element (NP)	Ni84,4%Cr14,2%Si1,4%	Measurement range	-270°C a 1300°C
Negative Element (NN)	Ni95,45%Si4,40%Mg0,15%	Thermocouple emf	-4,345 mV a 47,513 mV

Newer thermocouple, which is a substitute for type K thermocouple, as it has a much higher resistance to oxidation and in many cases, it is also a substitute for platinum-based thermocouples due to their maximum temperature of use.
The normal operating temperature should not exceed 1100ºC. It is recommended for oxidizing, inert or low oxygen atmospheres, as it does not suffer from the green-root effect.
It must not be exposed to sulphurous atmospheres. The graph shows the temperature deviation suffered by the type N thermocouple compared to the type K in an oxidizing atmosphere at a temperature of 1000ºC.

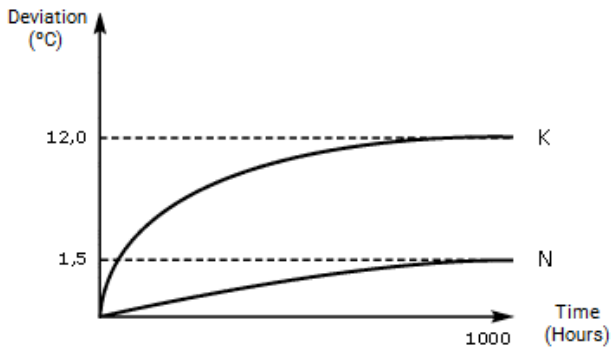

Thermocouple Type S (PLATINUM RHODIUM – PLATINUM)			
Positive Element (SP)	Pt90%Rh10%	Measurement range	-50°C to 1768°C
Negative Element (SN)	Pt100%	Thermocouple emf	-0,236 mV to 18,693 mV
Can be used on oxidant and inertial atmospheres, with reliability and stability at high temperatures, much higher than other thermocouples limits without platinum thermo-elements. The thermo-elements should not be exposed to metallic vapours or reducer atmospheres. This type of thermo-elements shouldn't be assembled directly in metallic pipes, but using ceramic isolators and protection pipe, alumina based (Al2O3) with high purity level (99,7%), commercially known as 799 (old 710). Still is possible to manufacture the thermocouple using ceramic pipes with alumina content of 67%, known as 610, but is not recommendable for these platinum types thermocouples. For temperatures above 1500°C is used platinum pipes. Is not recommendable to use these types of thermocouples in temperatures below 0°C, due to response sensor instability.			

Thermocouple Type R (PLATINUM RHODIUM – PLATINUM)			
Positive Element (RP)	Pt87%Rh13%	Measurement range	-50°C to 1768°C
Negative Element (RN)	Pt100%	Thermocouple emf	-0,226 mV to 21,101 mV
Has the same thermocouple S features, with approximately 11% more thermoelectric power.			

Tolerance Classes

Table 1 shows the tolerance classes (classes 1 and 2), according to the type of thermocouple, temperature of use and deviation, according to IEC 60584.

Types		R and S	B	J	T	E	K and N
Class 1	Temperature Range [°C]	0 to 1100 1100 to 1600	-	-40 to 375 375 to 750	-40 to 125 125 to 350	-40 to 375 375 to 800	-40 to 375 375 to 1000
	Deviation [°C]	± 1 ± (1 + 0,003(t - 1100)	-	± 1,5 ± 0,004 (t)	± 0,5 ± 0,004 (t)	± 1,5 ± 0,004 (t)	± 1,5 ± 0,004 (t)
Class 2	Temperature Range [°C]	0 to 600 600 to 1600	600 to 800 800 to 1700	-40 to 333 333 to 750	-40 to 133 133 to 350	-40 to 333 333 to 900	-40 to 333 333 to 1200
	Deviation [°C]	± 1,5 ± 0,0025 (t)	± 0,0025 (t) ± 0,005 (t)	± 2,5 ± 0,0075 (t)	± 1,0 ± 0,0075 (t)	± 2,5 ± 0,0075 (t)	± 2,5 ± 0,0075 (t)

Table 1 - Classes of thermocouples according to IEC 60584

Colour Codes

TC Types	Conductor Combinations		Standards			
	+ Leg	- Leg	IEC 60584-3	ANSI Mc96.1	DIN43714	BS 1843
T	Copper	Constantan	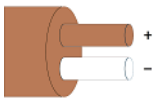	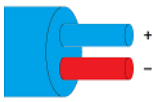	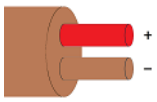	
J	Iron	Constantan			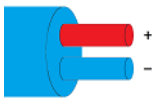	
E	Nickel - Chromium	Constantan	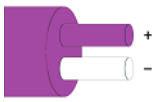	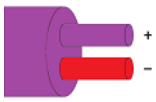		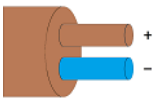
K	Nickel - Chromium	Nickel - Aluminum	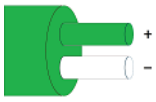	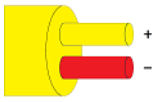	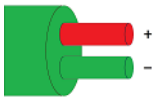	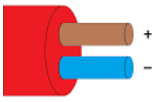
Vx	Copper	Constantan	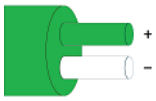	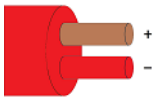	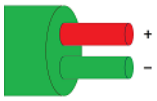	
N	Nicrosil	Nisil	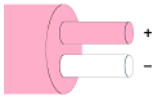		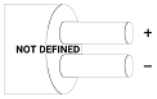	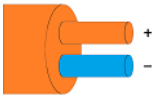
S	Platinum - 10% Rhodium	Platinum			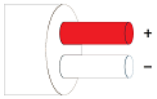	
R	Platinum - 13% Rhodium	Platinum			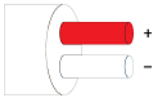	
U	Copper	Nickel	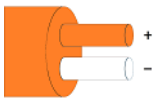		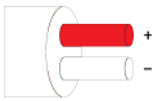	
B	Platinum - 30% Rhodium	Platinum - 6% Rhodium	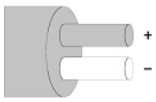	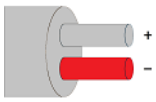	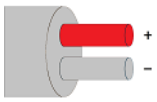	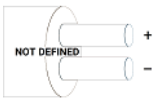
G	Tungsten	Tungsten – 26% Rhenium	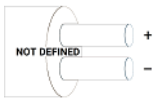		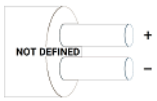	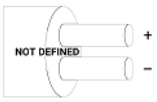
D	Tungsten – 3% Rhenium	Tungsten – 25% Rhenium	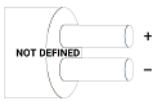	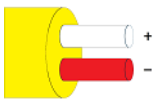	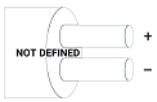	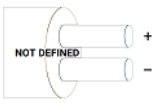
C	Tungsten – 5% Rhenium	Tungsten – 26% Rhenium	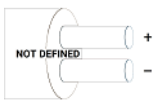	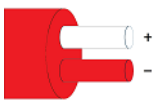	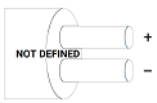	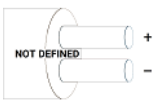

Vx is the compensating cable designation for thermocouple type K, also defined as KCA/KCB
U is the compensating cable designation for thermocouple types S and R.

Materials

Below are the characteristics of the main materials, available as standard for protection tubes, process connection and protection sheaths of thermocouple elements.

SS 304 (1.4301 / X5CrNi18-10)

AISI 304 is a widely-used austenitic chromium-nickel stainless steel. Stainless steel 304 has excellent corrosion resistance in a wide variety of environments and when in contact with different corrosive media. Pitting and crevice corrosion can occur in environments containing chlorides. Stress corrosion cracking can occur at temperatures over 60°C. Stainless steel 304 has good resistance to oxidation in intermittent service up to 870°C and in continuous service to 900°C. However, continuous use at 425-860°C is not recommended if corrosion resistance in water is required. The steel is common throughout industry particularly in food processing as the material is not susceptible to corrosion from acids found in common foodstuffs. As a consequence, such steel is ideal for items such as sinks, work surfaces, preparation areas and refrigerators. It is also a perfect material for use in the pharmaceutical industry for environments such as clean rooms.

SS 316L (1.4404 / X2CrNiMo17-12-2)

SS 316 is the standard molybdenum-bearing grade, second in importance to 304 amongst the austenitic stainless steels. The molybdenum gives to SS 316 better overall corrosion resistant properties than Grade 304, particularly higher resistance to pitting and crevice corrosion in chloride environments. The SS 316L, the low carbon version of 316 and is immune from sensitization (grain boundary carbide precipitation). Thus, it is extensively used in heavy gauge welded components. The austenitic structure also gives these grades excellent toughness, even down to cryogenic temperatures. Compared to chromium-nickel austenitic stainless steels, 316L stainless steel offers higher creep, stress to rupture and tensile strength at elevated temperatures. SS 316L with excellent corrosion resistance properties in acids (low concentration and temperature phosphoric and sulfuric) in non-oxidizing atmospheres. Maximum temperature of 927ºC.

SS 321 (1.4541 / X6CrNiTi18-10)

Stainless steel similar to SS 304 but with titanium compound, which gives it better properties when subjected to welding operations and increasing chemical resistance for use in the food and chemical industry. Characterised by high corrosion resistance in general atmospheric corrosive environments it exhibits excellent resistance to most oxidizing agents, general foodstuffs, sterilizing solutions, dyestuffs, most organic chemicals plus a wide variety of inorganic chemicals, also hot petroleum gases, steam combustion gases, nitric acid, and to a lesser extent sulphuric acid. It displays good oxidation resistance at elevated temperatures has excellent resistance to intergranular corrosion and has excellent weldability. Maximum temperature of 900ºC.

Inconel 600 (2.4816 / NiCr15Fe)

Alloy 600 is a nonmagnetic, nickel-based high temperature alloy possessing an excellent combination of high strength, hot and cold workability, and resistance to ordinary form of corrosion. This alloy also displays good heat resistance and freedom from aging or stress corrosion throughout the annealed to heavily cold worked condition range. The high chromium content of alloy 600 raises its oxidation resistance considerably above that of pure nickel, while its high nickel content provides good corrosion resistance under reducing conditions. This alloy exhibits high levels of resistance to stress and salt water, exhaust gases, and most organic acids and compounds. Good resistance to oxidation at high temperatures. Maximum temperature of 1149ºC.

SS 446-1 (1.4749 / X18CrN28)

SS 446-1 is a ferritic, heat resisting, stainless chromium steel, characterized by extremely good resistance to reducing sulphurous gases, very good resistance to oxidation in air, good resistance to oil-ash corrosion and good resistance to molten copper, lead and tin. SS 446-1 should be chosen mainly for service at temperatures above 700°C where the excellent resistance of the material to slag corrosion and sulphidizing gases is particularly advantageous. Typical applications for SS 446-1 are recuperators in the metallurgical and glass industries, thermocouple protection tubes, soot blower tubes, injection nozzles and muffle tubes in continuous wire annealing furnaces.

ALLOY C-276 (2.4819 / UNS N10276)

ALLOY C-276 is a Nickel-chromium-molybdenum wrought alloy that is considered the most versatile corrosion resistant alloy available. This alloy is resistant to the formation of grain boundary precipitates in the weld heat-affected zone, thus making it suitable for most chemical process applications in an as welded condition. Alloy C-276 also has excellent resistance to pitting, stress-corrosion cracking and oxidizing atmospheres up to 1030ºC. Alloy C-276 has exceptional resistance to a wide variety of chemical environments. Some typical applications of ALLOY C-276 include equipment components in chemical and petrochemical organic chloride processes and processes utilizing halide or acid catalysts. Other industry applications are pulp and paper (digesters and bleach areas), scrubbers and ducting for flue gas desulfurization, pharmaceutical and food processing equipment.

MONEL 400 (2.4361 / UNS N04400)

Monel 400 is a nickel-copper alloy (about 67% Ni – 23% Cu) that is resistant to sea water and steam at high temperatures as well as to salt and caustic solutions. This nickel alloy is particularly resistant to hydrochloric and hydrofluoric acids when they are de-aerated. As would be expected from its high copper content, alloy 400 is rapidly attacked by nitric acid and ammonia systems. A low corrosion rate in rapidly flowing brackish or seawater combined with excellent resistance to stress-corrosion cracking in most freshwaters, and its resistance to a variety of corrosive conditions led to its wide use in marine applications and other non-oxidizing chloride solutions. Monel 400 can be used in temperatures up to 535ºC.

SS 310 (1.4845 / X8CrNi25-21)

AISI 310 stainless steel is a high chromium nickel austenitic stainless steel with a high carbon content. It has excellent mechanical properties, high temperature oxidation resistance and heat resistance in continuous service up to 1150ºC. AISI 310 is used in various industrial furnaces, steam boilers and petroleum system parts and thermocouple protection tubes. Examples include fire box sheets, furnace linings, boiler baffles, thermocouple wells, aircraft cabin heaters, and jet engine burner liners.

SS 904L (1.4539 / X1NiCrMoCu25-20-5)

Grade 904L stainless steel is a non-stabilized austenitic stainless steel with low carbon content. This high alloy stainless steel is added with copper to improve its resistance to strong reducing acids, such as sulphuric acid. The steel is also resistant to stress corrosion cracking and crevice corrosion. Grade 904L stainless steels have excellent resistance to warm seawater and chloride attack. Grade 904L stainless steels offer good oxidation resistance. However, the structural stability of this grade collapses at high temperatures, particularly above 400ºC. major applications of grade 904L stainless steels include pulp and paper processing industries and acetic, phosphoric and sulphuric acid processing plants.

KANTHAL A-1

Kanthal A-1 is a ferritic iron-chromium-aluminium alloy (FeCrAl alloy) for use at temperatures up to 1400°C. The alloy is characterized by high resistivity and very good oxidation resistance. Typical applications for Kanthal A-1 are electrical heating elements in industrial furnaces and thermocouple protection tubes.

KANTHAL AF

Kanthal AF is a ferritic iron-chromium-aluminium alloy (FeCrAl alloy) for use at temperatures up to 1300ºC. The alloy is characterized by excellent oxidation resistance and very good form stability resulting in long element life. Typical applications for Kanthal AF are as electrical heating elements in industrial furnaces and thermocouple protection tubes.

KANTHAL APM

Kanthal APM is an advanced powder metallurgical, dispersion strengthened, ferritic iron-chromium-aluminium alloy (FeCrAl alloy) for use at tube temperatures up to 1250ºC. Kanthal APM tubes have good form stability at high temperature. Kanthal APM forms an excellent, non-scaling surface oxide, which gives good protection in most furnace environments, i.e., oxidizing, sulphurous and carburizing, as well as against deposits of carbon, ash, etc. The combination of excellent oxidation properties and form stability makes the alloy unique. Typical applications for Kanthal APM are thermocouple protection tubes and as radiant tubes in electrically or gas fired furnaces such as continuous galvanizing furnaces, seal quench furnaces, holding furnaces and dosing furnaces in the aluminium and zinc.

C610 (Pytagoras)

Ceramic material non porous. Very resistant to hydrofluoric acid, thermal mechanical shocks is used not only as external protection tubes (thermowells), but also as internal tubes and insulators. Maximum temperature: 1400ºC

C799 (Alsint 99.7)

Is the most resistant material used as internal and external protection. Excellent resistance to hydrofluoric acid, alkalis vapours and atmospheres from reducer to oxidizing. It has the highest purity and lower porosity compared with other types of ceramics. Maximum temperature: 1600ºC

Materials	Maximum Temperature [ºC]
Carbon Steel	550
Aisi 446-1	1093
Aisi 304	899
Aisi 310	1147
Hasteloy B	815
Hasteloy C	1038
Monel	893
Nicrobell	1250
Molybdenum	1870
HR-160	1200
Titanium: Oxidant Atmosphere	538
Titanium: Reducer Atmosphere	1260
Tantalum	2349
Thermo-alloy APM	1425
Ceramic C610 (Pytagoras)	1400
Ceramic C710/799 (Alsint)	1600
Metal Ceramic LT-1	1375
Recrystalized Silicone Carbide	1600
Platinum	1699

Table 2 - Maximum material service temperature: Indicative temperatures, subject to change according to atmosphere / medium

Installation

The EXtemp TTH 2xE are suitable for high temperature measurement and installed on industrial furnaces. The hot junction type should choose according temperature range and atmosphere type. For high temperatures, (above 1200°C) should be used ceramic protection tubes and insulators along with platinum type thermocouple.

When using ceramic sheaths, it is important to avoid thermal shocks, when installing or even when removing the thermocouples to maintenance, because the ceramic sheaths may break.

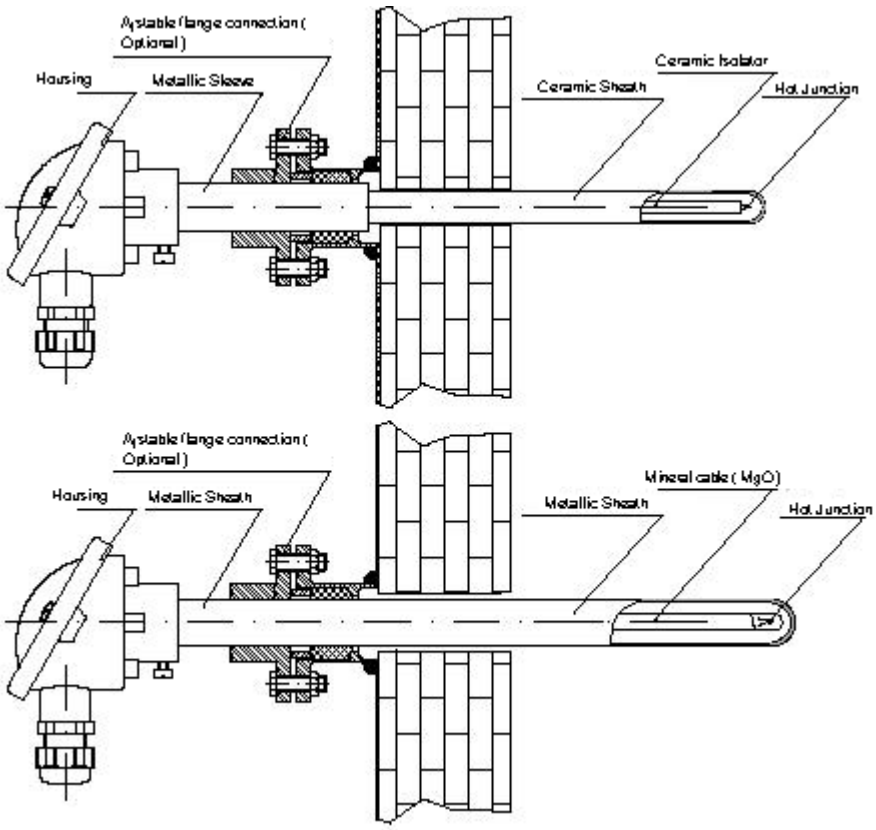

⚠	Please note ambient temperature cannot be greater than measuring insert sealing.
⚠	If process temperature is near to limit temperature thermowell materials, it's better to install vertically the thermocouple, to avoid stem bending due weight's mechanical action.
⚠	Please make sure, if you use a proper compensation cable to connect the device to your system.

Mechanical Construction

Generic Configuration

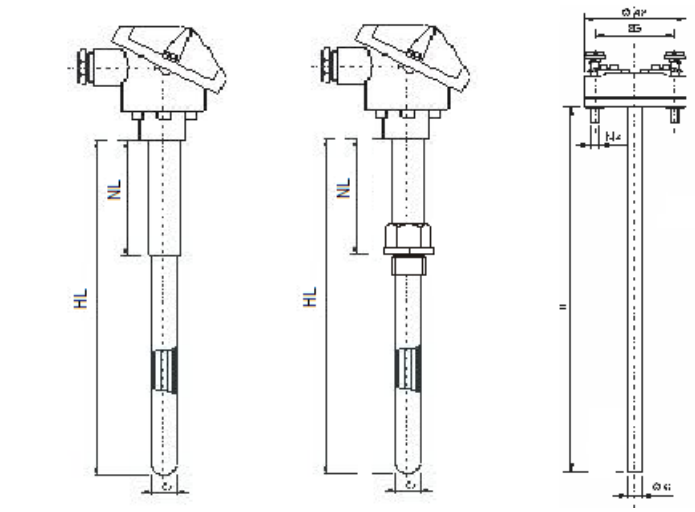

Left: Device with metallic sleeve (neck) for free installation or with adjustable flange or compression fitting
Middle: Device with metallic sleeve and welded thread for process connection
Right: Mineral insulated replaceable measuring insert.

	The mineral insulated insert pictured on right side is available as standard with OD 6mm.
	For better long-term stability, you may choose a terminal block with grounding post. (Not pictured)
	The neck length must be selected carefully in order the temperature inside housing do not exceed maximum allowed, particularly when is a temperature transmitter installed.

Connection Heads/Housings

These housings allow accommodate and connect up to two temperature transmitters or ceramic blocks, or one of each type. Are available in different materials and are standard with one cable entry M20x1.5. If you require a different cable entry an/cable gland, please contact us.

A temperature transmitter is required if the housing has a display, because it is powered by current loop.

	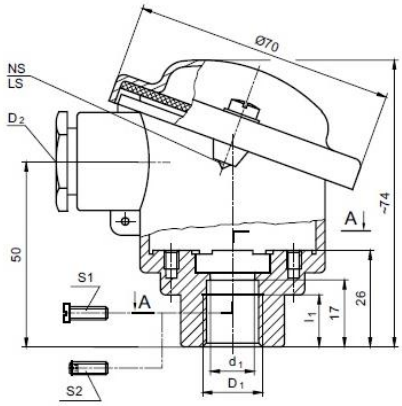	Material: Aluminium, Epoxy coated Approval: Non-hazardous area Form: DIN B Ingress Protection: IP65 Process Entry: ½" G Process Entry: Bore 15.3 mm Cable Entry: M20x1.5 Local Display: No Type: AB1 **Order Code Option** B1 (½" G) F0 (Bore 15.3 mm)
	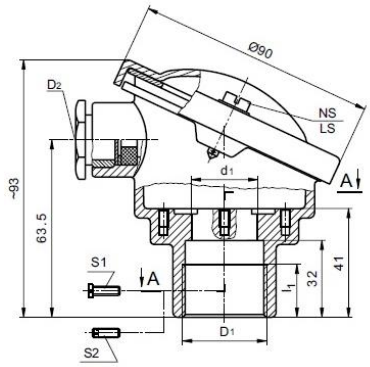	Material: Aluminium, Epoxy coated Approval: Non-hazardous area Form: DIN A Ingress Protection: IP65 Process Entry: ½" G Cable Entry: M20x1.5 Local Display: No Type: AA1 **Order Code Option** A1
	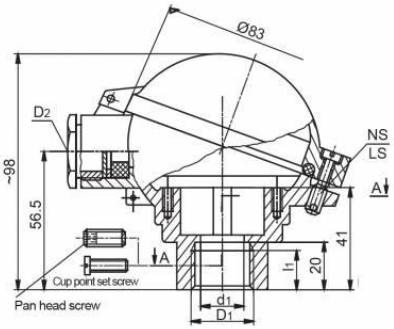	Material: Aluminium, Epoxy coated Approval: Non-hazardous area Form: DIN B Ingress Protection: IP65 Process Entry: ½" G Cable Entry: M20x1.5 Local Display: No Type: AL2 **Order Code Option** L2
	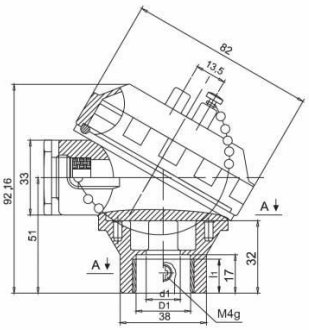	Material: Aluminium, Epoxy coated Approval: Non-hazardous area Form: DIN B Ingress Protection: IP65 Process Entry: ½" G Cable Entry: M20x1.5 Local Display: No Type: AT1 **Order Code Option** T1

	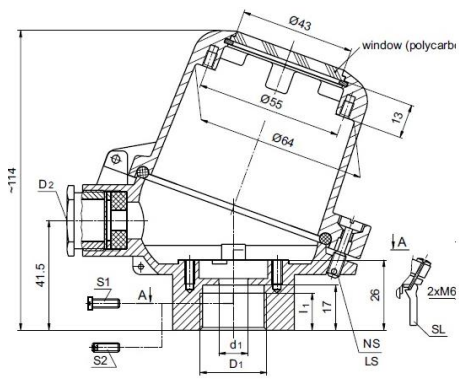	Material: Aluminium, Epoxy coated Approval: Non-hazardous area Form: DIN D Ingress Protection: IP65 Process Entry: ½" G Cable Entry: M20x1.5 Local Display: Available, at top cover Type: AD2 **Order Code Option** D2 (without display) D3 (with display)
	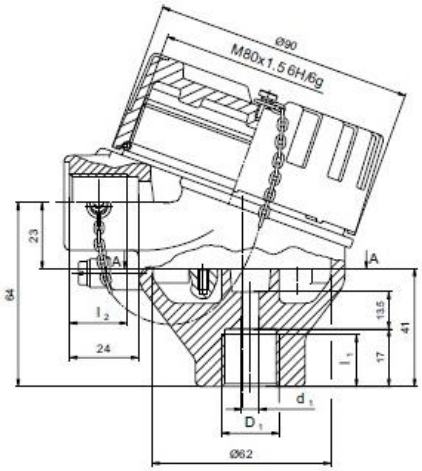	Material: Aluminium, Epoxy coated Approval: ATEX II 2GD EEx d IIC Ingress Protection: IP66/68 Process Entry: ½" G, ½" NPT Number of Cable Entries: up 2 Cable Entry: M20x1.5, ½" NPT Local Display: No Type: AE1 **Order Code Option** B2 (Process ½" G 1x cable entry)
	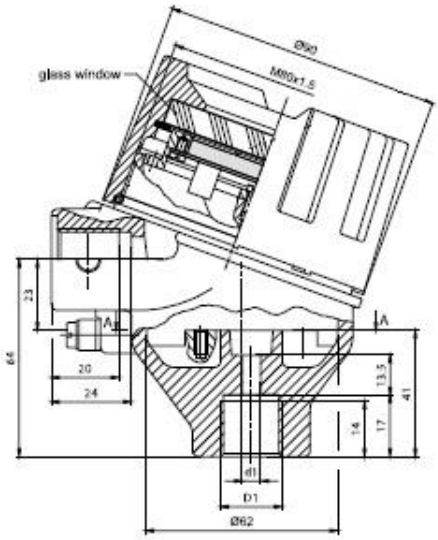	Material: Aluminium, Epoxy coated Approval: ATEX II 2D Ex tD A21 Ingress Protection: IP66/68 Process Entry: ½" G, ½" NPT Number of Cable Entries: up 2 Cable Entry: M20x1.5, ½" NPT Local Display: Available, at top cover Type: AE2 **Order Code Option** B3 (Process ½" G 1x cable entry)

	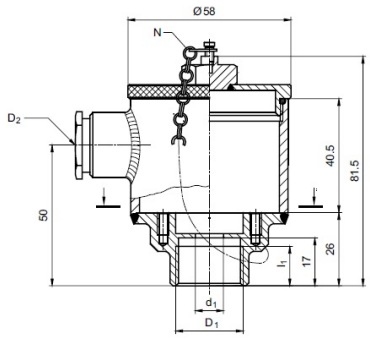	Material: AISI 316L Approval: Non-hazardous area Form: DIN B Ingress Protection: IP65 Process Entry: ½" G Cable Entry: 1 x M20x1.5 Local Display: No Type: SB1 **Order Code Option** B4
	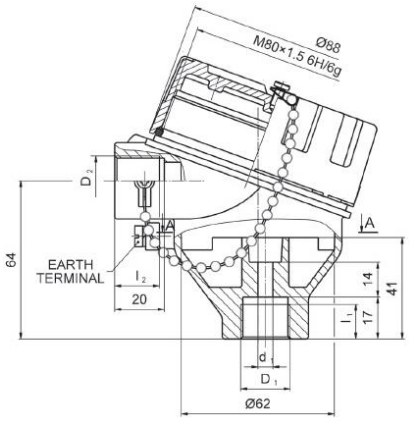	Material: AISI 316L Approval: ATEX IM2 Ex d I Mb/ II2G Ex d IIC Gb/II 2D Ex t IIIC Db Ingress Protection: IP66/68 Process Entry: ½" G, ½" NPT Number of Cable Entries: up 2 Cable Entry: M20x1.5, ½" NPT Local Display: No Type: SE1 **Order Code Option** S2 (Process ½" G, 1x cable entry)
	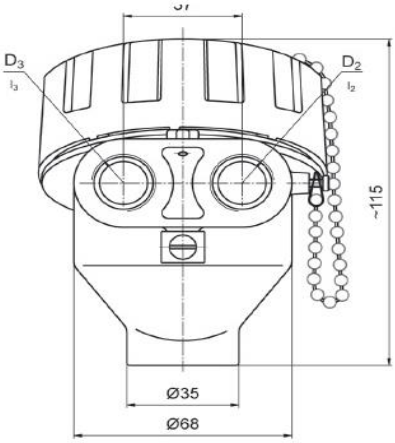	Material: AISI 316L Approval: ATEX IM2 Ex d I Mb/ II2G Ex d IIC Gb/II 2D Ex t IIIC Db Ingress Protection: IP66/68 Process Entry: ½" G, ½" NPT Number of Cable Entries: up 2 Cable Entry: M20x1.5, ½" NPT Local Display: Yes, at top cover Type: SE2 **Order Code Option** S3 (Process ½" G 1x cable entry)

Process Connection

The model TTH 20E has as standard process connection the most common threaded welded SS316 connections of ½” and above and adjustable cast/carbon steel flanges.

⚠	The product configuration must include a metallic neck or support when using an adjustable flange.

	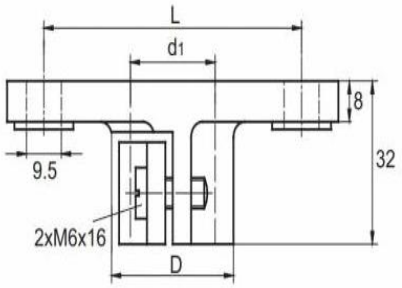	Material: Cast steel Coating: Black powder Temperature Limit: 300°C **For 15 mm tubes (d)** d1: 16 mm D: 27 mm L: 55 mm **Order Code Option** F4 **For 21.3/22 mm tubes (d)** d1: 23 mm D: 33 mm L: 70 mm **Order Code Option** F5
	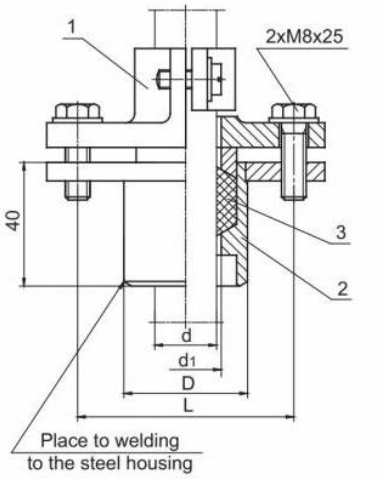	Material: 1 – Cast steel 2 – Carbon steel 3 – PTFE ring Coating: Black powder Temperature Limit: 300°C **For 15 mm tubes (d)** d1: 16 mm D: 35 mm L: 55 mm **Order Code Option** F6 **For 21.3/22 mm tubes (d)** d1: 23 mm D: 40 mm L: 70 mm **Order Code Option** F7

Technical Data

Device

Application	Temperature measurement				
Principle	Thermocouple				
Types	Thermocouple types J, K, N, R, S; Type B on demand				
Accuracy	Class 1 and 2 IEC60584; Special tolerances on demand				
Configuration	Standard simplex and duplex; Triplex configuration on request				
Operating temperature	Mineral insulated insert type J	Min	0°C	Abs. max	900°C
	Mineral insulated insert type K				1150°C
	Mineral insulated insert type N				1250°C
	Ceramic insert (types R, S); Wire 0.35 mm	Min	0°C	Abs. max	1500°C
	Ceramic insert (types R, S); Wire 0.50 mm				1600°C

Electrical Specifications

Output signal	Thermocouple emf	mV
	4-20 mA	Loop power 2 wires
	4-20mA HART	Loop power 2 wires
Temperature Transmitter	Power supply	12 to 30 Vdc
	Cold junction compensation	-20…+60°C
	Compensation accuracy	1°C
	Load [RL]	RL ≤ (UB - 12V) / 0.021 A
	Insulation resistance	>100 MΩ/500 V

Mechanical Characteristics

Protective Tube Dimensions	Total length	Up to 1400 mm, customized; over 1400 mm on request	
	Ceramic outer diameter	12 mm or 15 mm	
	Wall thickness	OD 12 mm	2 mm
		OD 15 mm	2 mm
			2.5 mm
Internal Sheath Materials	Aisi 321	Types J and K, simplex and duplex	
	Inconel 600	Types K and N, simplex and duplex	
	Nicrobell	Type N, simplex only	
	Aisi 310	Types K, simplex and duplex; S simplex on demand	
	C610, C799	Types S and R, simplex and duplex	
Materials	Protection tube	C610	Abs. Max. 1400°C
		C799	Abs. Max. 1600°C
	Cooling/Extension neck	Aisi 316(L), Aisi 310, Aisi 314, Aisi 446-1	
	Connection head/Housing	Aluminium, Aisi 316L	
	Ceramic terminal block	Type A	Steatite C 220
		Type B	45% Al2O3
		Type B ATEX (G)	Steatite C 220
	Cable entry washer / Cable gland (optional)	Zinc-plated press steel seal oil resistant rubber (-40…100°C) / Polyamide; nickel plated brass HT up to 200°C	
Terminal Block	Number of poles	2 or 4 poles; 6 poles on demand	
	Type of pole	Post type, screwed, nickel plated brass	
Terminal Block, Spring Loaded	Up to 4 poles	Ceramic, posts nickel plated brass, bush SS 316	
	Up to 4 poles with ground	Ceramic, posts nickel plated brass, bush SS 316	

Environmental Conditions	
Storage temperature	-30 to 80ºC
Relative humidity	0 to 95 %RH, non-condensing
Calibration units	ºC, ºF, K
Weight	Depending on material, diameter and length + block/transmitter
Protection class (complying with EN 60529)	Refer to assembly housing
Approvals, Certifications	RoHS 2, CE, ATEX Zone 2

	Make sure power supply is switched off during wiring procedures.
	Make sure power supply is according to specification on device label.
	Are available different temperature transmitters, with 4-20mA analogue output or with digital communication. Please refer to specific product datasheet to check wiring configurations.
	Check if connection cable is according device connector requirements.
	Check if maximum load resistance is according device specifications.

Additional Information

Maintenance

The thermocouple inserts of EXtemp series do not require a specific maintenance. The only recommendation is to check periodically the sensor integrity and perform an annual recalibration.

Factory Calibration Protocol

This factory quality protocol is supplied with every unit. This acts as an inspection report that shows compliance with DIN/EN 60584 essential points. One measurement point is issued for the effect.

Factory Calibration Certificate

The factory calibration certificate must be ordered with the device. The measurement points according to customer specifications and inside device operating temperature range.

Materials Certificate

A certificate according to EN10204-3.1 is available as option and if necessary, has to be ordered with the device.

Accessories

As accessories or spare parts, we have available measuring inserts, PC programming temperature transmitters and interface kit with software.

Delivery Time

For small quantities, less than 10 pieces with basic options, the delivery times are likely 8 to 10 working days or express manufacturing (48h) with feasibility according configuration and required quantities.

How to Order

Sign		Instruction
Tick	✓	Single option selection field necessary
Double tick	✓✓	Multiple option selection field available
Added extra	⊕	Not mandatory selection field

Order Code		Description
TTH 21E-		Mineral Insulated Thermocouple Series EXtemp Model TTH 21E
010	✓	Ceramic sheath type, Length, Diameter
A		C 610, max. length 700 mm, Diam. 15/11 mm
B		C 610, max. length 1000 mm, Diam. 12/8 mm
C		C 710, max. length 700 mm, Diam. 12/8 mm
D		C 710, max. length 700 mm, Diam. 15/11 mm
E		C 710, max. length 1000 mm, Diam. 12/8 mm
F		C 610, max. length 1000 mm, Diam. 15/11 mm
G		C 799, max. length 1000 mm, Diam. 15/10 mm
H		C 799, max. length 1000 mm, Diam. 15/11 mm
K		C 610, max length 1400 mm, Diam. 15/11 mm
M		C 710, max. length 1400 mm, Diam. 12/8 mm
N		C 710, max. length 1400 mm, Diam. 15/11 mm
Y		Special version on request
020	✓	Total Length HL
4		200 mm
5		250 mm
6		300 mm
7		350 mm
8		400 mm
X		Customized length
9		Special version on request
030	✓	Thermocouple Type, Sheath Diameter and Material
C2		Thermocouple S simplex, Cl. 1, 2x0.35mm, 1x C799
C3		Thermocouple S simplex, Cl. 1, 2x0.35mm, 2x C799
C5		Thermocouple S simplex, Cl. 1, 2x0.50mm, 2x C799
D3		Thermocouple R simplex, Cl. 1, 2x0.35mm, 2x C799
D5		Thermocouple R simplex, Cl. 1, 2x0.50mm, 2x C799
E2		Thermocouple S duplex, Cl. 1, 2x0.35mm, 1x C799
E3		Thermocouple S duplex, Cl. 1, 2x0.35mm, 2x C799
E5		Thermocouple S duplex, Cl. 1, 2x0.50mm, 2x C799
F3		Thermocouple R duplex, Cl. 1, 2x0.35mm, 2x C799
F5		Thermocouple R duplex, Cl. 1, 2x0.50mm, 2x C799
K3		Thermocouple K simplex, Cl. 1, MgO cable 6 mm, Aisi 310 (1.4845)
K4		Thermocouple K duplex, Cl. 1, MgO cable 6 mm, Aisi 310 (1.4845)
M1		Thermocouple J simplex, Cl. 1, MgO cable 6 mm, Aisi 321 (1.4541)
M3		Thermocouple K simplex, Cl. 1, MgO cable 6 mm, Inconel 600
M4		Thermocouple K duplex, Cl. 1, MgO cable 6 mm, Inconel 600
M6		Thermocouple N simplex, Cl. 1, MgO cable 6 mm, Nicrobell
M8		Thermocouple N simplex, Cl. 1, MgO cable 6 mm, Inconel 600
Not all options are listed here. Please contact us know current production plan for this device		

How to Order (continuation)

040	✓	Process Connection
00		Without process connection
A1		Welded G 1/2", SS316L
A2		Welded G 3/4", SS316L
A3		Welded G 1", SS316L
A4		Welded 1/2" NPT, SS316L
A5		Welded 3/4" NPT, SS316L
A6		Welded 1" NPT, SS316L
A7		Welded G 1 1/2", SS316L
A8		Welded 1 1/2" NPT, SS316L
F4		Adjustable oval flange cast steel 55 mm to suit tubes of 15 mm
F5		Adjustable oval flange cast steel 70 mm to suit tubes of 21-22 mm
F6		Adjustable oval flange cast+carbon steel 55 mm to suit tubes of 15 mm + welding neck
F7		Adjustable oval flange cast+carbon steel 70 mm to suit tubes of 21-22 mm + welding neck
Y9		Special version on request
Not all options are listed here. Please contact us know current production plan for this device		
050	✓	Neck Length NL
0		Without
1		75 mm
2		100 mm
3		120 mm
4		150 mm
X		Customized length
9		Special version on request
060	✓	Neck Diameter and Material
0		Without
A		15 mm, Aisi 316
C		21.3 mm, Aisi 446-1
R		21.3 mm, Aisi 314 (1.4841)
S		21.3 mm, Aisi 310S (1.4845)
Y		Special version on request
Not all options are listed here. Please contact us know current production plan for this device		
070	✓	Terminal Block
A		Steatite C 220, type A
B		Spring loaded block 45% Al2O3 type B
E		Spring loaded block Steatite C 220 type B ATEX Ex e IIG with bushing + ground post
G		Spring loaded disk with bushing prepared for temperature transmitter (33 mm) + ground post
N		Ceramic 45%Al203, type B (not spring loaded)
P		Spring loaded disk with bushing prepared for temperature transmitter (33 mm)
S		Without terminal block; free end wires
Y		Special version on request

How to Order (continuation)

080	✓	Connection Head; Cable Entry
A1		Aluminium head DIN form A, IP65, cable entry M20x1.5
B1		Aluminium head form DIN B, IP65, cable entry M20x1.5
B2		Aluminium head ATEX II 2GD EEx d IIC IP66, cable entry M20x1.5
B3		Aluminium head ATEX II 2GD EEx d IIC IP66, with LED display, cable entry M20x1.5
B4		SS316L head form DIN B, IP66, cable entry M20x1.5
B5		Polyamide head form DIN B, IP66, cable entry M20x1.5
B6		Polypropylene, FDA approval, head form DIN B, IP66, cable entry M20x1.5
D2		Aluminium head form DIN B high lid, to fit both terminal block and temperature transmitter, IP65, cable entry M20x1.5
D3		Aluminium head form DIN B high lid, with LED display, cable entry M20x1.5
M1		Aluminium head form mignon, cable entry M16x1.5
T1		Aluminium head form DIN B threaded cover and chain, max. IP68, cable entry M20x1.5
Y9		Special version on request
Not all options are listed here. Please contact us know current production plan for this device		
090	✓	Temperature Transmitter
A0		Not selected
W5		Universal input, output 4-20mA
W9		2x Universal input, output 2x 4-20mA
S2		Universal input, output 4-20mA HART
S3		Universal input, output 4-20mA HART, Ex-zones
Y9		Special version on request
⊕ 100	✓	Electrical Accessory Mounted
20B		Cable gland skintop M20x1.5, blue polyamide IP68
20N		Cable gland skintop M20x1.5, polyamide IP67
2ST		Cable gland M20S16 M20x1.5 HT (200ºC), nickel plated brass, IP66
20E		Cable gland skintop M20x1.5, polyamide IP66, ATEX Ex e
99Y		Special version on request
⊕ 110	✓	Label and Product Documentation Language
EN		English
FR		French
PT		Portuguese
⊕ 120	✓	Approval
ADE		Zone 2 ATEX II 3G Ex dc ec IIC Gc
AED		Zone 2 ATEX II 3G Ex dc IIC Gc
AIA		Zone 2 ATEX II 3G/D Ex ic IIC Gc IIIC Dc
YYY		Other on request, according to specification
⊕ 130	✓✓	Quality Assurance Documentation
C2		Factory calibration certificate, 2-point customer specification
C3		Factory calibration certificate, 3-point customer specification
M2		Materials certificate according to EN10204-3.1
Y9		Other on request, according to specification

Selection Example	
Thermocouple 1x K for continuous temperature of 1000°C, Inconel 600 internal sheath with diameter of 6mm and outer protection tube in ceramic C799. Immersion length of 500 mm and neck length of 200 mm. With temperature transmitter configured to 0…1200°C/4-20mA	
Order code	TTH 21E-CXM300XSBD2W5+20NEN/ 700 mm/ 200 mm/ 0-1200°C/4-20mA

Contact

	Parque Empresarial Baía do Tejo, Rua 48 Nº11 Apartado 5056 2830-571 Barreiro, Portugal		+351 212 070 802 +351 212 070 803 +351 210 900 148
	38.663817, -9.066176		+351 212 070 804
	www.deltasensor.pt		commercial@deltasensor.pt

Subject to modification. All rights reserved to Delta Sensor, Lda

Antes de imprimir este documento pense bem se é mesmo necessário fazê-lo: O meio ambiente é de todos.
Please consider the environment before printing this document.